SALES SERVICE
+358 (0)17 262 3555
info@econosto.fi

2.D3IIIIV

Dual plate check valve

WAFER TYPE
DN40-300

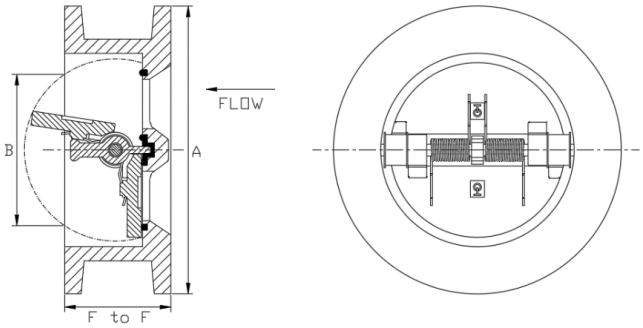

Dimensions

Code	Wafer fitting	DN (mm)	DN (in)	A (mm)	B (mm)	F to F (mm)	Kv (m^3/h)	Weight (kg)	Cracking pressure horizontal (mbar)
2.D3IIIIV.DN40	PN 10/16/25	40	1 ½"	94	46	43	44	1.1	3.21
2.D3IIIIV.DN50	PN 10/16/25	50	2"	108	46	43	44	1.5	3.21
2.D3IIIIV.DN65	PN 10/16/25	65	2 ½"	129	62	46	90	1.9	3.05
2.D3IIIIV.DN80	PN 10/16/25	80	3"	143	70	64	135	3	2.85
2.D3IIIIV.DN100	PN 10/16/25/ANSI 150#	100	4"	164	90	64	333	4	2.42
2.D3IIIIV.DN125	PN 10/16/25/ANSI 150#	125	5"	194	110	70	606	6	2.17
2.D3IIIIV.DN150	PN 10/16/25/ANSI 150#	150	6"	220	130	76	803	8.5	1.96
2.D3IIIIV.DN200	PN 25	200	8"	283	195	89	1435	15	1.55
2.D3IIIIV.DN250	PN 25/ANSI 150#	250	10"	338	245	114	2905	27	1.43
2.D3IIIIV.DN300	PN 25/ANSI 150#	300	12"	402	292	114	3504	34	1.29

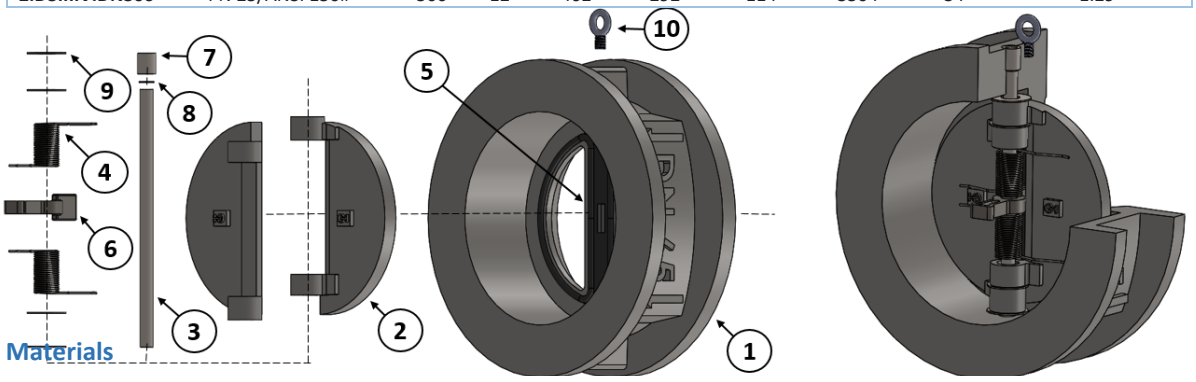

Materials

Part N.	Qty	Item	Code	Material/Description	Spare parts
1	1	Body	I	A-351 CF8M (AISI-316)	✗
2	1	Plates	I	A-351 CF8M (AISI-316)	✗
3	1	Shaft	I	EN-1.4404/AISI-316L	✓
4	2	Springs	I	EN-1.4401/AISI-316	✓
5	1	Seat	V	VITON	✗
6	1	Key		A-351 CF8M (AISI-316)	✗
7	1	Plugs		EN-1.4404/AISI-316L	✓
8	1	Plug O-rings		VITON	✓
9	4	Washers		EN-1.4404/AISI-316L	✓
10	1*	Lifting plug		STAINLESS STEEL	✗

* Only applies for DN≥250.

Norms	
Flange standard	PN 10/16/25 EN1092-1 ANSI 150# ASME B16.1
Flange face	Manufacture finish
Design std shell	EN 14341
Design pressure **PN 25/ ...** **ANSI 150#/ ...**	 25 bar 20 bar
Shell test pressure	1.5 * PN (EN 12266)
Closure test pressure	1.1 * PN (EN 12266)
Leakage rate	0 (EN 12266)
Min backpressure for closing	0.3-0.5 bar
Coating	N/A